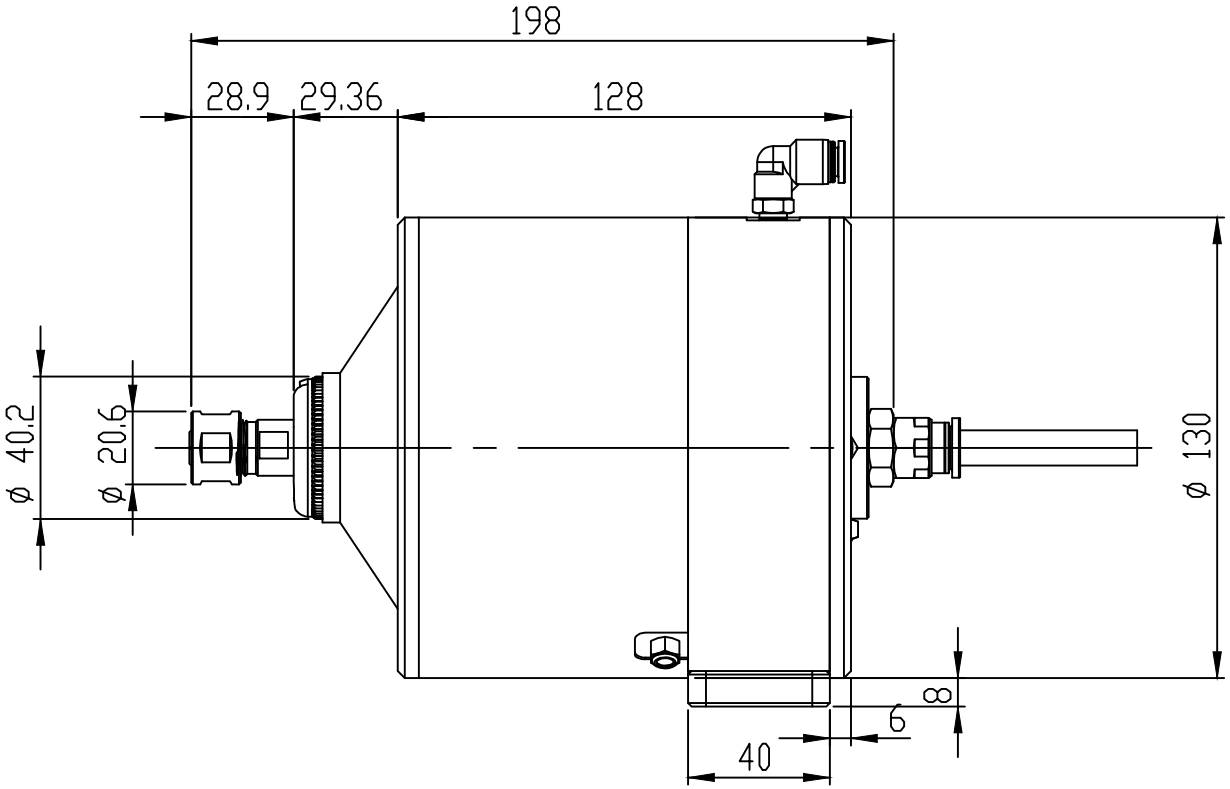
198
28.9
29.36
128
ø 40.2
20.6
ø
ø 130
8
6
40

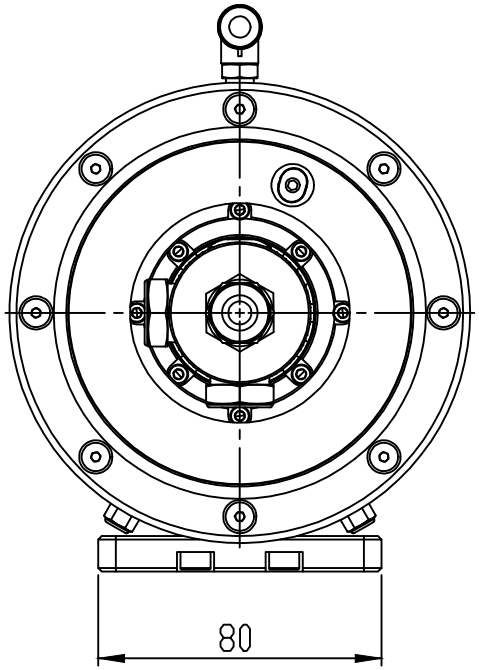
80

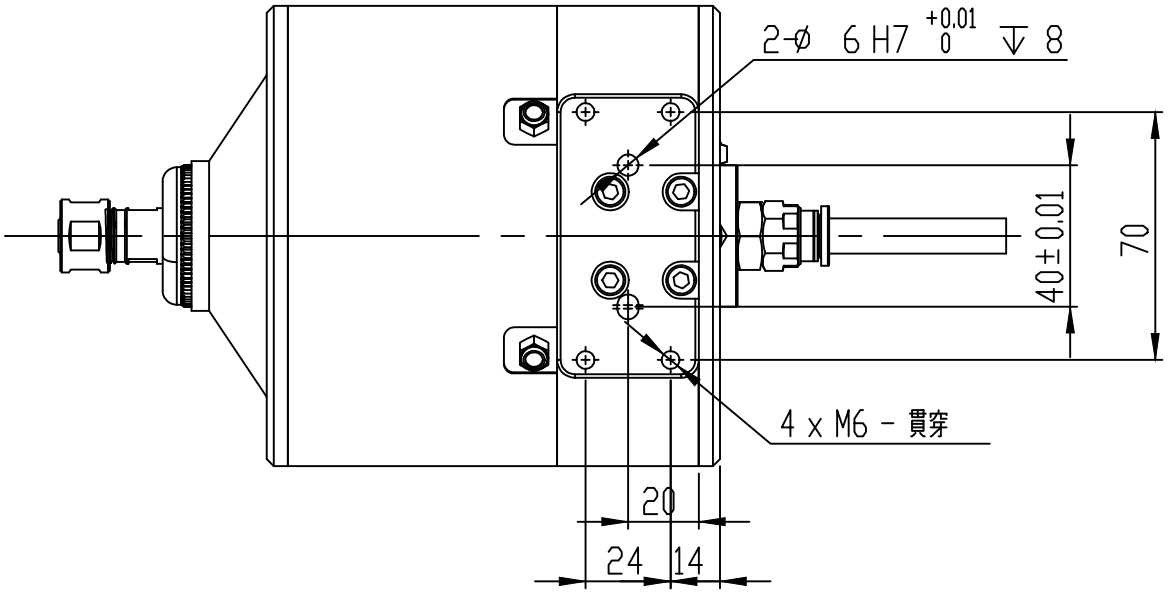
2-ø 6 H7 +0.01 0 ↧ 8
40±0.01
70
4 x M6 - 貫穿
20
24
14