TBT TIEFBOHRTECHNIK

THE DEFINITION OF PRECISION



DEFENCE SOLUTIONS

High-precision barrel manufacturing solutions
for small and large calibers

TBT TIEFBOHRTECHNIK

DEFENCE SOLUTIONS

HIGH-PRECISION BARREL MANUFACTURING SOLUTIONS FOR SMALL AND LARGE CALIBERS



With the ML Series, we deliver high-performance, flexible machining solutions for the production of both small-caliber barrels and large-caliber tubes – purpose-designed to meet the stringent requirements of the defence and armaments sector.

By combining deep-hole drilling, reaming, and rifling, merge complex process chains within a robust, cell-based manufacturing architecture. This includes tooling, process engineering, and automation delivered from a single source. Our manufacturing cells ensure stable, repeatable and highly reliable processing of even the most demanding components – while remaining efficient, scalable and configurable to your specific production requirements.

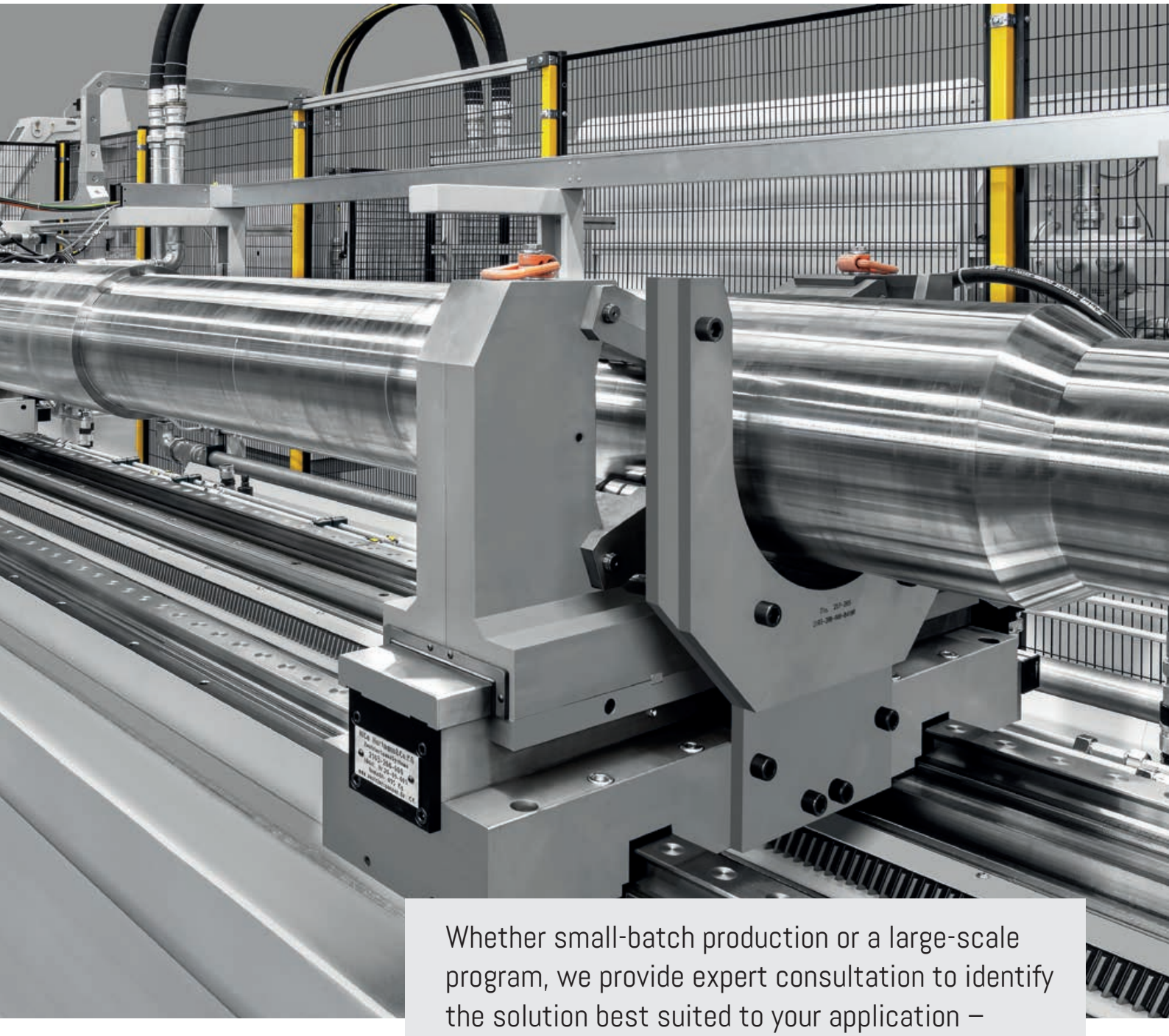

Whether small-batch production or a large-scale program, we provide expert consultation to identify the solution best suited to your application – On-site visits upon request.

+49 7123 976-0 | info@tbt.de

TBT TIEFBOHRTECHNIK

SMALL CALIBERS

HIGH-PRECISION DRILLING FOR SMALL DIAMETERS



For small-caliber barrel production, TBT offers high-precision deep-hole drilling solutions covering all common calibers, with drilling depths of up to 2,000mm.

Machines are available in configurations from 1 to 6 spindles, enabling efficient scaling across different production rates and batch sizes.

All of our machines can be set up as a standalone machining system or as a part of a fully automated manufacturing cell. Cell integration includes automated loading systems, transfer lines, buffer magazines, reaming operations, button rifling technology and process-optimized clamping and fixturing solutions - ensuring high repeatability, robust process stability and defence-grade production efficiency.







Highlights

- Deep-hole drilling, reaming and button rifling integrated into a fully aligned, end-to-end manufacturing concept - Directly from TBT
- Modular and scalable automation solutions for serial production or specialized manufacturing programs
- Fully integrated tooling solutions – developed and manufactured in-house, by TBT
- Perfectly suitable for military, hunting, civil and special calibers



Machine and tool portfolio

- → Deep-hole drilling machines
- → Reaming machines
- → Button Rifling machines
- → Gundrills
- → Reaming tools
- → Button Rifling tools

ALL FROM ONE SOURCE

TBT TIEFBOHRTECHNIK

TURNKEY SOLUTION

BARREL PRODUCTION REDEFINED – WITH THE FULLY AUTOMATED TBT TURNKEY SOLUTION

Our turnkey solution combines three highly flexible manufacturing applications into a fully integrated, efficient, and mission-reliable production system.

From initial engineering and system design through implementation and commissioning, customers receive a complete, ready-to-run solution precisely aligned with their production requirements.

The system is purpose-engineered to sustainably optimize production workflows, minimize interfaces, and ensure operator-friendly, safe, and robust machining in demanding defense manufacturing environments.

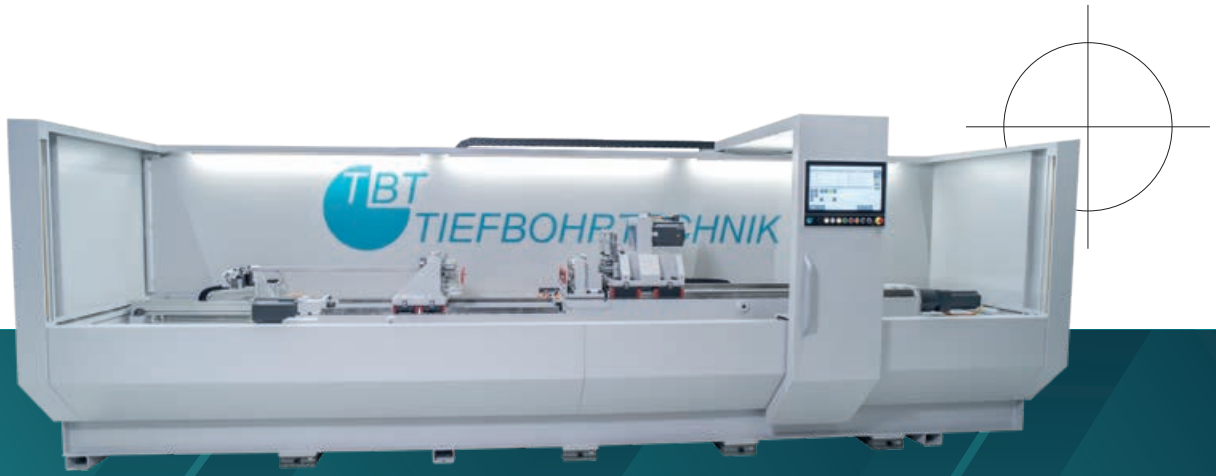





An outside-facing machine layout provides maximum configuration flexibility while minimizing changeover and downtime.

All system components are interconnected via a centralized control architecture with robotic integration, ensuring a seamless end-to-end manufacturing process with synchronized material flow and process control.



The TBT cell concept is designed to accommodate all common calibers up to .50 cal (12.7 mm) with barrel lengths of up to 1,000 mm.

In addition, the deep-hole drilling machine can be operated as a standalone unit for drilling operations up to 15 mm.

The standard configuration includes:

- ☑ one 4-spindle deep hole drilling machine
- ☑ one 2-spindle pull-reaming machine
- ☑ one 2-spindle button rifling machine
- → Also as 2-2-1 available

TBT TIEFBOHRTECHNIK

LARGE CALIBER

ARTILLERY DEEP-HOLE DRILLING
DRILLING DEPTHS UP TO 15,000 MM
FOR LARGE DIAMETER TUBES



For large caliber applications, we offer robust STS/BTA deep-hole drilling machines with a machining range from 15 to 400 mm bore diameter and drilling depths of up to 15,000 mm.

The ML300, ML500 and ML700 machine platforms are specifically designed for large cross-section tubes, such as artillery gun barrels and missile launch tubes. These systems feature modular configurability, high structural rigidity and the capability to integrate additional process steps, including rifling.

Custom-engineered solutions also enable the machining of tubes exceeding 10 meters in length, supporting demanding defence and strategic manufacturing requirements.

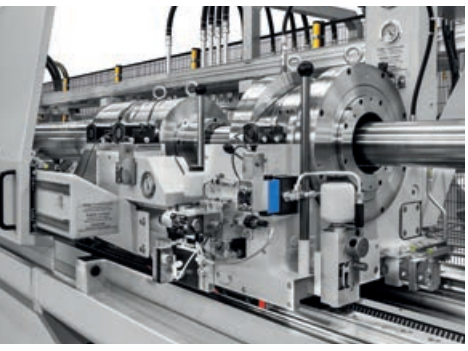



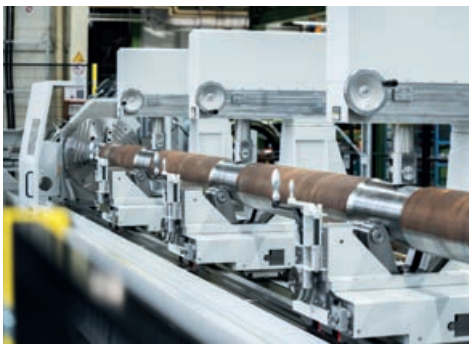

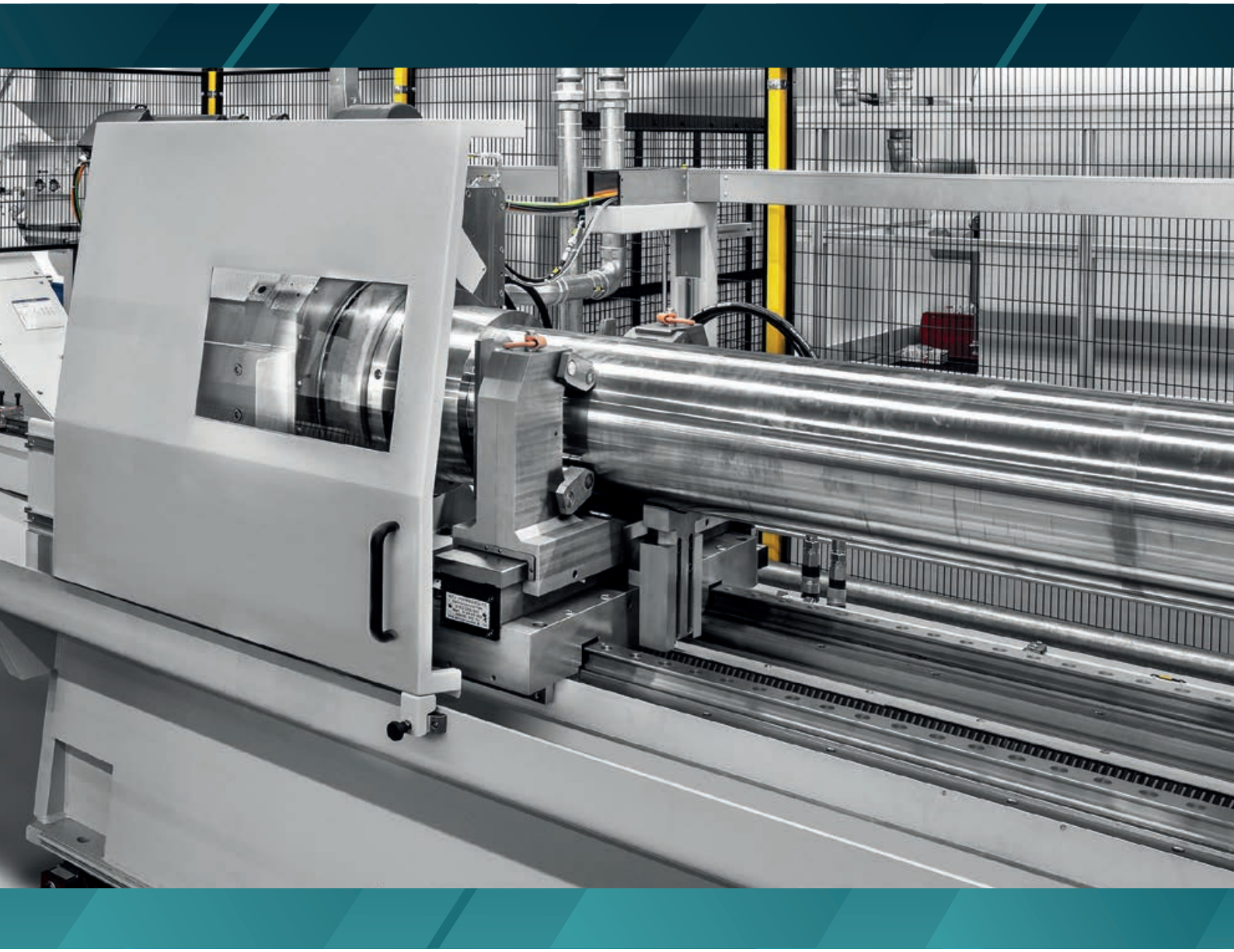

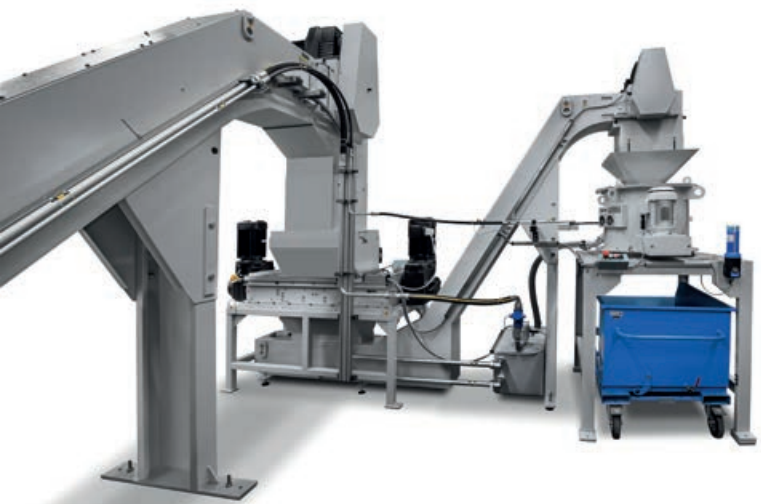

Highlights

- Deep-hole drilling and rifling of large caliber barrels – fully integrated within a single machine platform
- Custom-engineered solutions for extreme drilling depths and large diameter tubes
- Fully compliant with military and industrial specifications

TBT TIEFBOHRTECHNIK

ML700

HIGH-END SOLUTION FOR DEEP-HOLE DRILLING UP TO 15,000 MM*

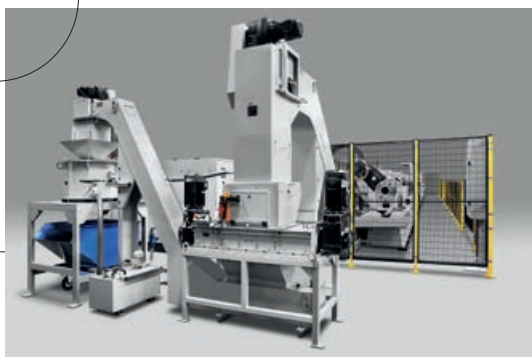

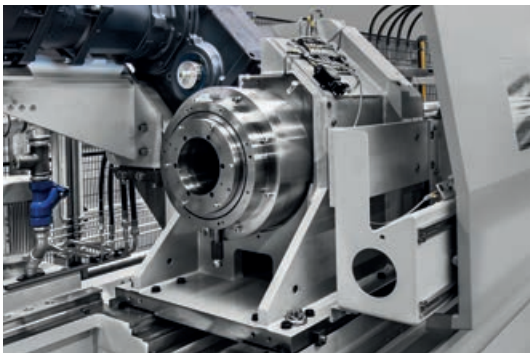

Boring Diameter

Solid Boring
15–150 mm

Counter Boring
up to 400 mm

Optimized for
STS-/BTA deep hole drilling processes

Robust machine structure
with highly stable single spindle

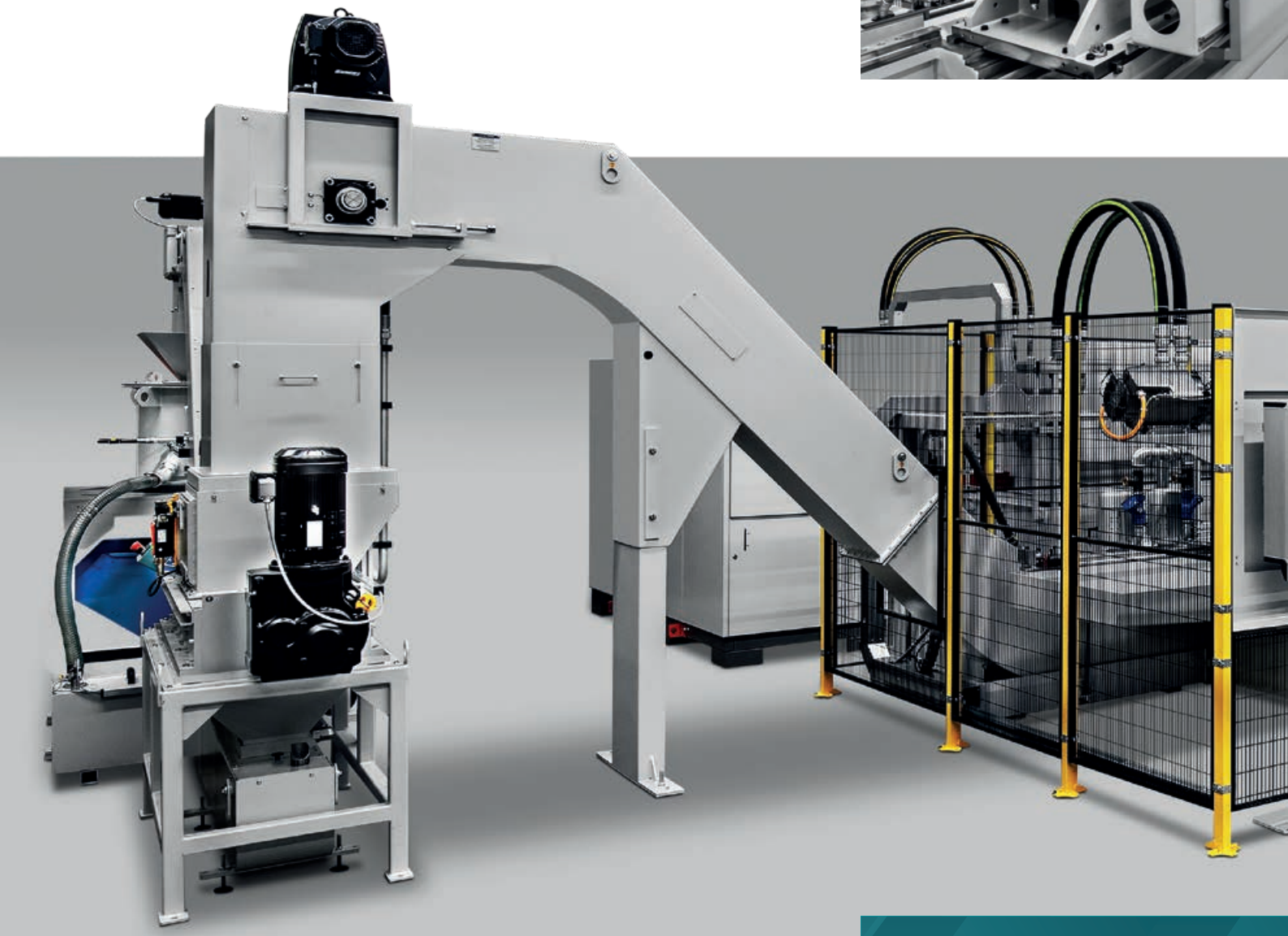

R700

PROCESS-RELIABLE SOLUTION FOR YOUR RIFLING REQUIREMENTS

Rifling Diameter
40–205 mm

Optimized for
Cut Rifling

Easy Changeover
of Cutting Heads

Same Base as the ML700

Robust machine structure
with highly stable single spindle

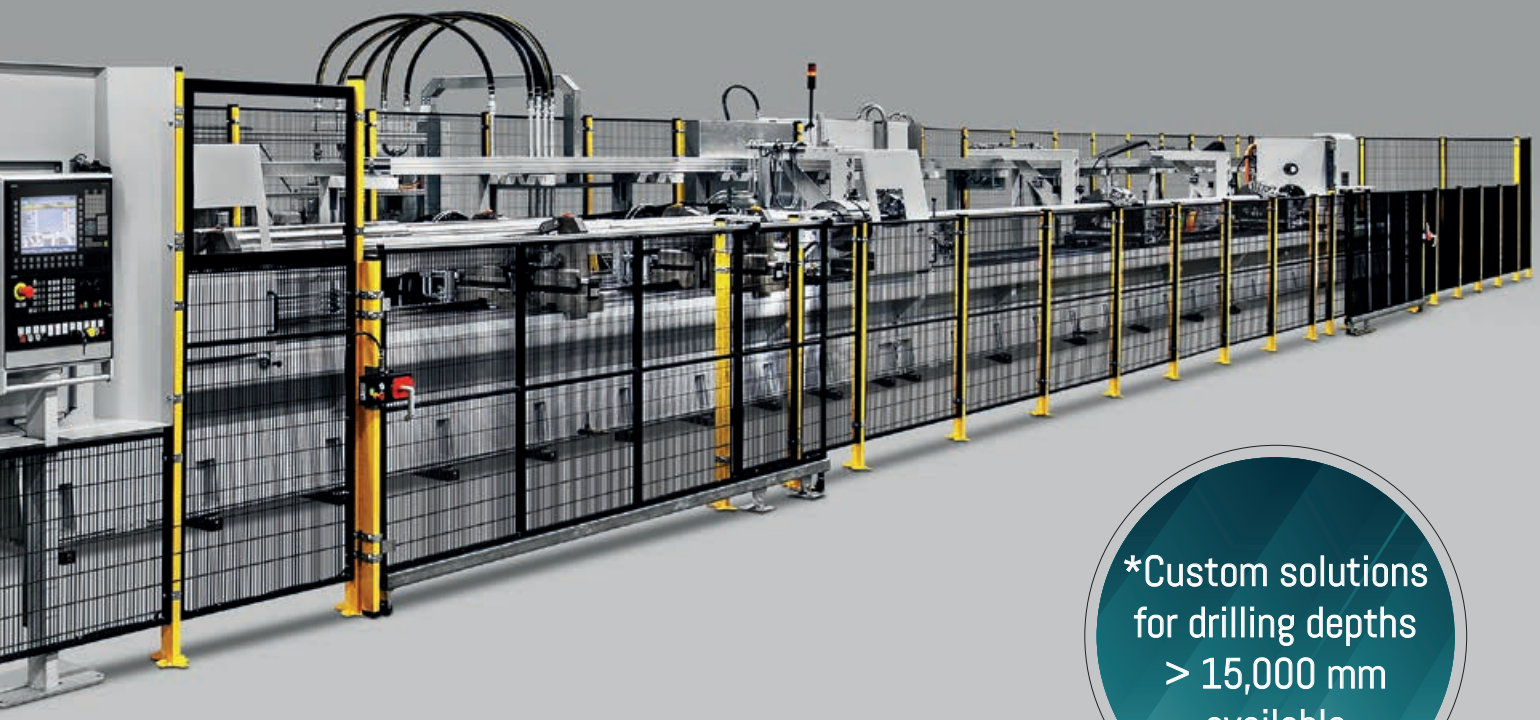

*Custom solutions for drilling depths > 15,000 mm available

TBT TIEFBOHRTECHNIK

PRECISION LAND-AND-GROOVE MACHINING FOR CANNON BARRELS

For internal machining of large-caliber cannon barrels, we supply purpose-built rifling machines designed for extended barrel lengths and large bore diameters. A high-stiffness machine architecture, precision drive technology, and fully controlled feed and rotation ensure excellent profile accuracy, uniform land-and-groove geometry, and consistent surface finish.

A wide range of rifling profiles, twist rates, and dimensional variants can be machined with a high level of flexibility. The modular system design and can be seamlessly integrated into existing manufacturing lines, meeting both military and heavy-industry manufacturing standards







Deep-hole drilling and rifling combined in a single machine

COMBINED MACHINE SOLUTION

As a highly innovative machine tool manufacturer, we deliver an integrated solution that combines deep-hole drilling and rifling of large-caliber cannon barrels within one machine platform. The continuous machine concept combines both machining operations on one base with minimal changeover effort and down-time. Uniting both processes in a single system, reduces interfaces, minimizes handling and setup times, and increases overall process reliability.

The machine features a modular design engineered for large diameters and high barrel lengths. Drilling and rifling parameters can be adjusted across a broad range, enabling a cost-effective, space-efficient, and technologically differentiated solution for large-caliber production in defense applications.



Highlights

- Deep Hole Drilling and Rifling in a Single System
- Flexible and Modular – for Varying Tube Lengths, Diameters, and Rifling Profiles
- Fully compliant with military and industrial specifications

TBT TIEFBOHRTECHNIK

For more than 60 years, we have stood for the highest quality, precision, and customer proximity in deep hole drilling technology.

We manufacture deep hole drilling machines and tools and carry out contract work. As a market leader in our industry, one thing drives us above all: providing our customers with absolute expertise and reliability across all areas of our business.

Machines

- **ML Series** | A true all-rounder in gun and BTA drilling
- **B Series** | Our precision giants with inclined bed
- **BW Series** | Deep hole drilling, milling, and thread cutting
- **Dies** | For flat or ring dies
- **Special Solutions** | Challenge us!

Tools

- **Single-Lip Drills** | Diameter range: 0.7 mm up to well over 50 mm
- **Insert Single-Lip Drills** | Diameter range: 12 mm to 28 mm
- **Two-Lip Drills** | Diameter range: 6 mm to 25 mm
- **STS/BTA Drills** | Diameter range: 25 mm to 170 mm
- **Special Solutions** | Step drills, reaming tools, and much more

Service

- **Remote Maintenance** | For fast analysis of your machine
- **Spare Parts** | For TBT machines and other brands
- **Used Machines** | Some available immediately from stock
- **Retrofit** | Sustainable upgrades for your old machine

Contract Drilling

- Extensive machine park
- Prototype production
- Series production
- Machines and tools from our own manufacturing
- 3D measuring room





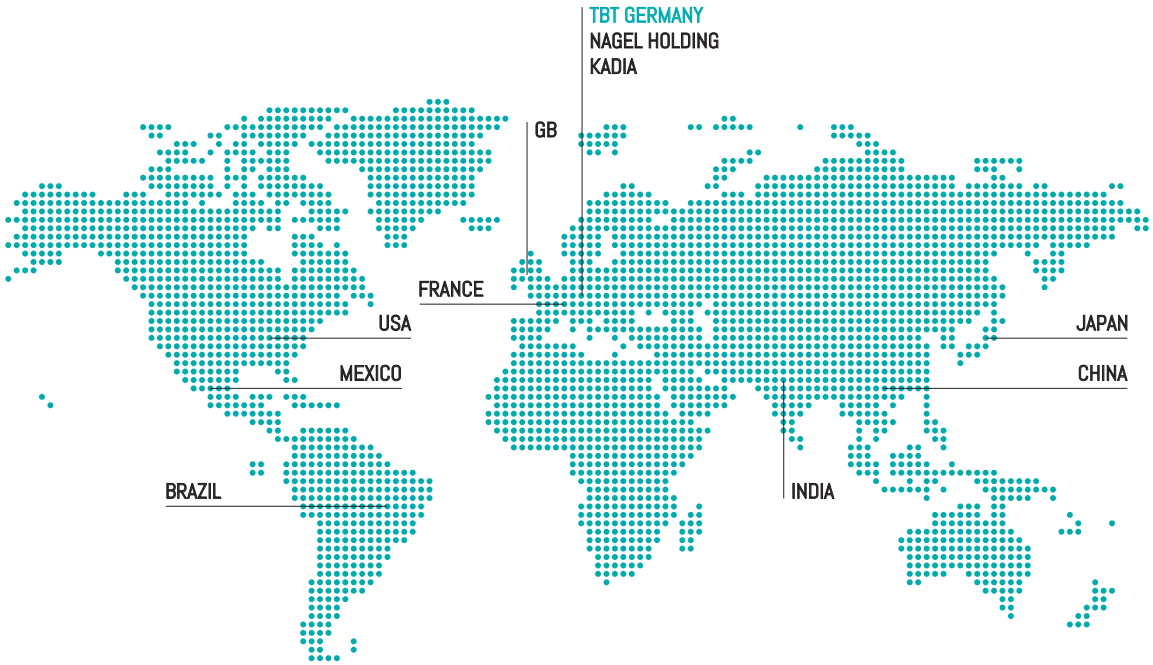

At TBT, we combine the flexibility, commitment, and customer focus of a lean, medium-sized company with a global presence.

TBT Tiefbohrtechnik GmbH + Co
Siemensstraße 1
72581 Dettingen/Erms
Germany
info@tbt.de
www.tbt.de

TBT S.à.r.l.
Z.I. Gutenberg - 7 rue Joseph Cugnot
57200 Sarreguemines
France
contact@tbt.fr
www.tbt.fr

TBT USA Inc.
8020 Kensington Court
Brighton, MI 48116
USA
info@tbtgundrilling.com
tbtgundrilling.com

TBT Tiefbohrtechnik Pvt. Ltd.
41 a/5 Mathura Enclave,
Second floor, 1st cross,
opposite to ABB,
Peenya industrial area 2nd phase,
Chok Kasandra,
Bengaluru 560 058
India
w.kiefer@tbt.de

TBT U.K. Ltd.
Gorsey Lane, Coleshill
Birmingham, B46 1JU
Great Britain
info@tbtuk.com
www.tbtuk.com

Nagel do Brasil
Máquinas e Ferramentas Ltd.
Av. Brasilia, 125, 13.327.900 Salto-SP
Brazil
nagel@nagel.com.br
www.nagel.com.br

NAGEL Machinery Trading Co. Ltd.
Room 1106; Yulin Building;
No.5 second Alley
Xiangjunnanli Chao yang District
Beijing China
jiangang@nagel-tbt.com.cn
www.nagel-tbt.com.cn

We are represented in many parts of the world by subsidiaries or experienced representatives. You can find all contact details on our website.

WE LOOK FORWARD TO YOUR VISIT!

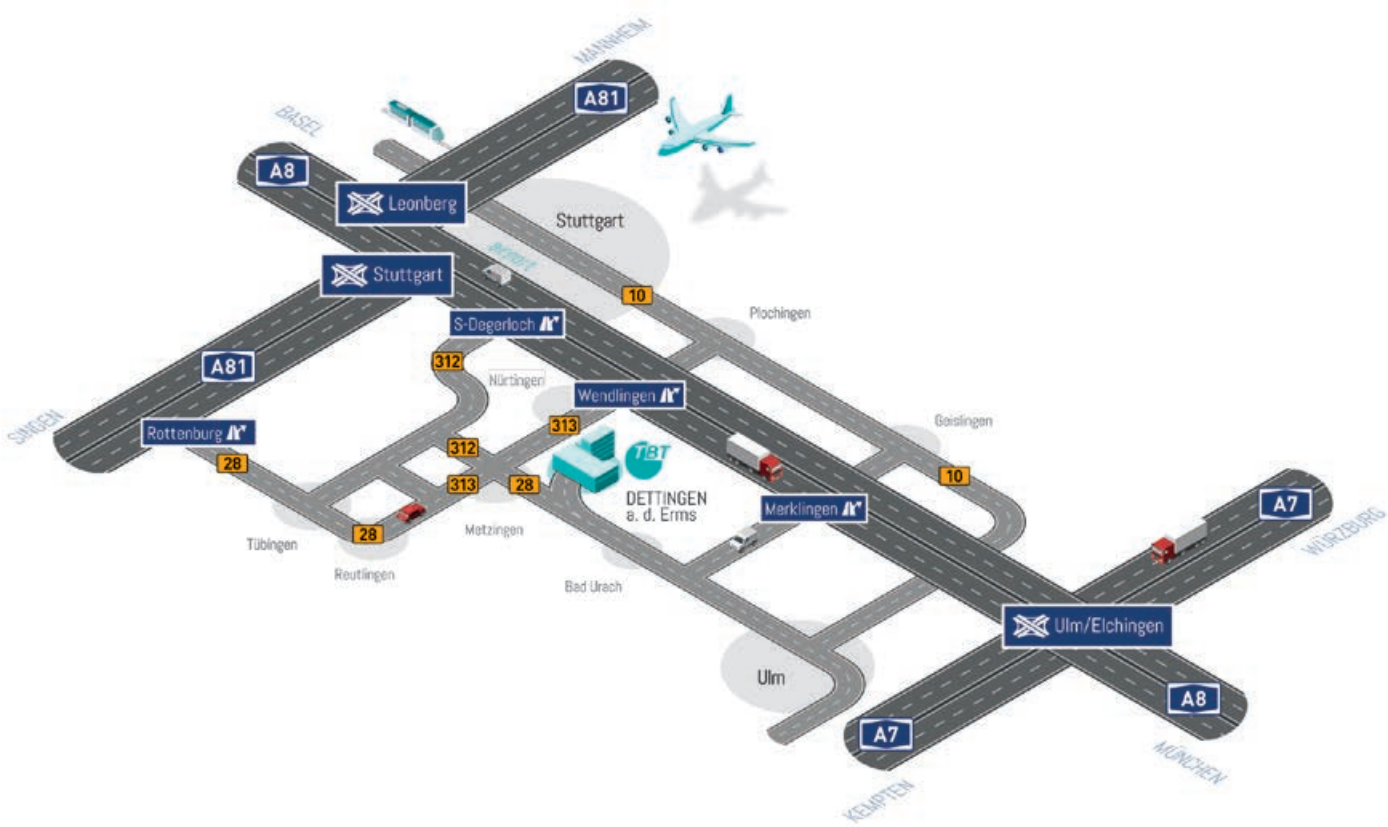

TBT TIEFBOHRTECHNIK

TBT Tiefbohrtechnik GmbH + Co
Siemensstraße 1
72581 Dettingen/Erms
Germany
T: +49 7123 976-0
F: +49 7123 976-200
info@tbt.de
www.tbt.de

Visit us online!

Website | LinkedIn | YouTube | Facebook | Instagram